# ESPRIT 748 + PROGRAMMING GUIDE

Made in CANADA

USER FRIENDLY

## SOFTWARE VERSION 3.20

**KEYPAD TROUBLE DISPLAY**

Key **"ON"** =

| | | | |
|---|---|---|---|
| **[1]** | No battery/low voltage | **[7]** | Communicator report failure |
| **[2]** | Power failure | **[8]** | Timer loss* |
| **[4]** | Bell disconnect | **[9]** | Tamper or zone wiring failure |
| **[5]** | Maximum bell current | **[10]** | Telephone line failure |
| **[6]** | Max auxiliary current | **[11]** | Fire loop trouble |

*To clear timer loss trouble, see Key Access Programming **[MEM]**. Press **[CLEAR]** to clear troubles.

**FIGURE 1**

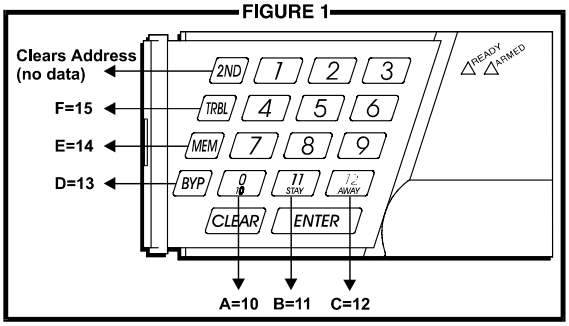


**FIGURE 2**

**HEXA DIGIT DATA DISPLAY FOR LED KEYPADS**

Note: LCD keypads will display current data on the screen.

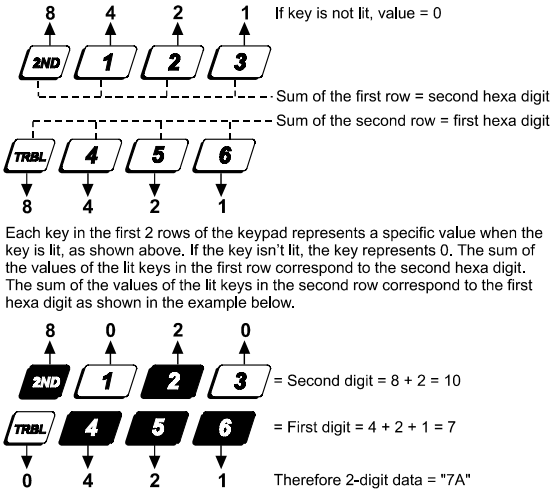


Each key in the first 2 rows of the keypad represents a specific value when the key is lit, as shown above. If the key isn't lit, the key represents 0. The sum of the values of the lit keys in the first row correspond to the second hexa digit. The sum of the values of the lit keys in the second row correspond to the first hexa digit as shown in the example below.

Note: values 10-15 represent hexa digits A - F respectfully, see figure 1

## HEXA PROGRAMMING:

Addresses 000 to 043 and 300 to 527 are programmed using the Hexa Programming method. In this mode, you can enter any hexa-digit from 0-F where keys [1] to [9] represent digits 1 to 9 respectively; the other keys represent hexa digits A to F as shown in figure 1. To program using the Hexa Programming method:

1) Press **[ENTER]** + *Installer Code (default: **484848**)*
2) The **[ENTER]** key will flash indicating you are in programming mode
3) Enter the desired 3-digit address
4) The keypad will display the 2-digit data currently saved at this address as described in figure 2
5) Enter 2-digit data; after entering data you do not need to press [ENTER], the software will automatically save the data into the selected address
6) Return to **step 2** or press **[CLEAR]** to exit programming mode

## STREAMLINED SECTION PROGRAMMING

This is an alternate method to Hexa Programming. The addresses (000-043 and 300-527) programmed in the Hexa Programming method are grouped into 67 sections where each section contains four addresses (i.e. section 00 = addresses 000-003). Using this method allows you to program 8 digits (4 addresses) without having to exit and re-enter addresses. Note, the keypad will not display the current data in the Hexa Streamlined Programming method. To program using the Hexa Streamlined Section method:

1) Press **[ENTER] +** *Installer code (default: **484848**)* **+ [7]**
2) The [ENTER] and [2ND] keys will flash to indicate you are in programming mode
3) Enter **2-digit section** (00-67)
4) The [ENTER] key will remain on while the [2ND] key will be off
5) Enter **8-digit data** to program the section
6) The keypad will "beep" to indicate that the section has been programmed, data is saved and the software has advanced to the next section
7) Return to **step 4** or press **[CLEAR]** to exit programming mode

### INSTALLER CODE (Default 484848)

Full access to programming, except user access codes. No access to arming/disarming. Use only numeric keys from **[1]** to **[10]**. (key **[10]** = 0)

**PANEL ANSWER OPTIONS**

First digit disables "Answering Machine Override" (key **[2ND]** or key **[1]**), or determines period of time between first and second call (see table below). Second digit determines number of rings required before panel will answer. If **[2ND][2ND]** is entered, panel will not answer. (Default value is **[2ND] [8]**.)

| Streamline section | Data | Description | Address |
|---|---|---|---|
| 00 | ___/___ | Installer code (1st, 2nd digit) | **000** |
| | ___/___ | Installer code (3rd, 4th digit) | **001** |
| | ___/___ | Installer code (5th, 6th digit) | **002** |
| | ___/___ | Panel answer options | **003** |
| | | Number of rings (Max. 15) | |

**ANSWERING MACHINE OVERRIDE**

| | |
|---|---|
| **[2ND]** or **[1]** = disabled | **[5]** = 40 seconds |
| **[2]** = 16 seconds | **[6]** = 48 seconds |
| **[3]** = 24 seconds | **[7]** = 56 seconds |
| **[4]** = 32 seconds | **[8]** to **[F]** = 60 seconds |

| Streamline section | Data | Description | Address | |
|---|---|---|---|---|
| 01 | ___/___ | Panel identifier (1st, 2nd digit) | **004** | Identifies the control panel to the PC. |
| | ___/___ | Panel identifier (3rd, 4th digit) | **005** | |
| | ___/___ | PC password (1st, 2nd digit) | **006** | Identifies the PC to the panel. |
| | ___/___ | PC password (3rd, 4th digit) | **007** | |

**TELEPHONE AND ACCOUNT NUMBERS**

If only one central station phone number is used, program the same number for telephone number 1 and 2. **If only one account number is required, the same number must be entered for both account "A" and "B".** (No Default)

| | | | |
|---|---|---|---|
| **[10]** | = the number "0" | **[BYP]** | = switch from pulse to tone while dialing |
| **[11]** | = * | **[MEM]** | = pause 4 seconds |
| **[12]** | = # | **[TRBL]** | = end of number |

**COMPUTER TELEPHONE NUMBER** (View at addresses **008** to **015**.)

Streamline section **02** __ / __ / __ / __ / __ / __ / __ / __ (1 2 3 4 5 6 7 8)

Streamline section **03** __ / __ / __ / __ / __ / __ / __ / __ (9 10 11 12 13 14 15 16)

**Press [TRBL] to end phone number if less than 16 digits are programmed.**

**CENTRAL STATION TELEPHONE NUMBER 1** (View at addresses **016** to **023**.)

Streamline section **04** __ / __ / __ / __ / __ / __ / __ / __ (1 2 3 4 5 6 7 8)

Streamline section **05** __ / __ / __ / __ / __ / __ / __ / __ (9 10 11 12 13 14 15 16)

**Press [TRBL] to end phone number if less than 16 digits are programmed.**

**CENTRAL STATION TELEPHONE NUMBER 2** (View at addresses **024** to **031**.)

Streamline section **06** __ / __ / __ / __ / __ / __ / __ / __ (1 2 3 4 5 6 7 8)

Streamline section **07** __ / __ / __ / __ / __ / __ / __ / __ (9 10 11 12 13 14 15 16)

**Press [TRBL] to end phone number if less than 16 digits are programmed.**

**ACCOUNT "A" AND "B":** (View at addresses **032** to **035**.)

Streamline section **08** __ / __ / __ / __ (1 2 3 4) **A**  __ / __ / __ / __ (5 6 7 8) **B**

**For 3 digit account numbers, enter "skip" ([2ND]) as first digit.**

| Streamline section | Data | Description | Address |
|---|---|---|---|
| 09 | [2ND]/[2ND] | Future use | 036 |
| | [2ND]/___ | 1st digit: value must be entered i.e. [2ND]<br>2nd digit: time correction (See table) | 037 |
| | ___/___ | 1st digit: telephone 1 format<br>2nd digit: telephone 2 format | 038 |
| | ___/___ | 1st digit: PGM1 type<br>2nd digit: PGM2 type | 039 |
| 10 | ___/___ | PGM 1 | 040 |
| | ___/___ | PGM2 | 041 |
| | ___/___ | PGM mask 1 | 042 |
| | ___/___ | PGM mask 2 | 043 |

**TIME CORRECTION:**
(address **037** second digit)

| | | | |
|---|---|---|---|
| [2ND] | - No adjustment | [8] | - Minus 4 sec. |
| [1] | - Plus 4 sec. | [9] | - Minus 8 sec. |
| [2] | - Plus 8 sec. | [10] | - Minus 12 sec. |
| [3] | - Plus 12 sec. | [11] | - Minus 16 sec. |
| [4] | - Plus 16 sec. | [12] | - Minus 20 sec. |
| [5] | - Plus 20 sec. | [BYP] | - Minus 24 sec. |
| [6] | - Plus 24 sec. | [MEM] | - Minus 28 sec. |
| [7] | - Plus 28 sec. | [TRBL] | - Minus 32 sec. |

## COMMUNICATOR FORMATS

**Key**

- **[2ND]** = **ADEMCO** slow (1400Hz, 1900Hz, 10bps)
- **[1]** = (1400Hz, 1800Hz, 10bps)
- **[2]** = **SILENT KNIGHT** fast (1400Hz, 1900Hz, 20bps)
- **[3]** = **SESCOA** (2300Hz, 1800Hz, 20bps)
- **[4]** = **RADIONICS** (40bps with 1400Hz handshake)
- **[5]** = **RADIONICS** (40bps with 2300Hz handshake)
- **[6]** = **RADIONICS** with PARITY (1400Hz, 40bps)
- **[7]** = **RADIONICS** with PARITY (2300Hz, 40bps)
- **[8]** = ***ADEMCO** express
- **[9]** = ***ADEMCO** contact ID (programmable codes)
- **[10]** = ***ADEMCO** contact ID (all codes)
- **[TRBL]** = ***DTMF** - no handshake (personal dialing)

*= 4-Digit Codes Only

## PROGRAMMABLE CONTACT ID EVENT CODES

All addresses from **300** to **527** (sections **11** to **67**) programmed with values other than **[2ND] [2ND]** will report the contact ID codes corresponding to the values programmed. Values to be programmed should be selected from this table.

| CID | REPORTING CODE | PROG. VALUE | CID | REPORTING CODE | PROG. VALUE |
|---|---|---|---|---|---|
| 100: | AUXILIARY ALARM | [2ND] / [1] | 300: | SYSTEM TROUBLE | [2] / [2] |
| 110: | FIRE ALARM | [2ND] / [2] | 301: | AC LOSS | [2] / [3] |
| 111: | FIRE SMOKE | [2ND] / [3] | 302 | LOW SYSTEM BATTERY | [2] / [4] |
| 112: | COMBUSTION | [2ND] / [4] | 305: | SYSTEM RESET | [2] / [5] |
| 113 | WATER FLOW | [2ND] / [5] | 306: | PROGRAM CHANGED | [2] / [6] |
| 114: | HEAT | [2ND] / [6] | 309: | BATTERY TEST FAIL | [2] / [7] |
| 115: | PULLSTATION | [2ND] / [7] | 320: | SOUNDER/RELAY TROUBLE | [2] / [8] |
| 116: | DUCT | [2ND] / [8] | 321: | BELL 1 TROUBLE | [2] / [9] |
| 117: | FLAME | [2ND] / [9] | 323: | ALARM RELAY TROUBLE | [2] / [10] |
| 118: | NEAR ALARM | [2ND] / [10] | 350: | COMMUNICATION TROUBLE | [2] / [11] |
| 120: | PANIC ALARM | [2ND] / [11] | 351: | TELCO 1 FAULT | [2] / [12] |
| 121: | DURESS | [2ND] / [12] | 354: | FAIL TO COMMUNICATE | [2] / [BYP] |
| 122: | SILENT PANIC | [2ND] / [BYP] | 370: | PROTECTION LOOP TROUBLE | [2] / [MEM] |
| 123: | AUDIBLE PANIC | [2ND] / [MEM] | 371: | PROTECTION LOOP OPEN | [2] / [TRBL] |
| 130: | BURGLARY | [2ND] / [TRBL] | 372: | PROTECTION LOOP SHORT | [3] / [2ND] |
| 131: | PERIMETER BURG. | [1] / [2ND] | 373: | FIRE LOOP TROUBLE | [3] / [1] |
| 132: | INTERIOR BURG. | [1] / [1] | 382: | SENSOR TROUBLE | [3] / [2] |
| 133: | 24HR BURGLARY | [1] / [2] | 383: | SENSOR TAMPER | [3] / [3] |
| 136: | BURGLARY OUTDOOR | [1] / [3] | 400: | OPEN/CLOSE | [3] / [4] |
| 137: | BURGLARY TAMPER | [1] / [4] | 401: | OPEN/CLOSE BY USER # | [3] / [5] |
| 138: | BURGLARY NEAR ALARM | [1] / [5] | 402: | GROUP OPEN/CLOSE | [3] / [6] |
| 140: | GENERAL ALARM | [1] / [6] | 403: | AUTOMATIC OPENING/CLOSING | [3] / [7] |
| 150: | 24 HOUR AUX | [1] / [7] | 404: | LATE TO OPEN/CLOSE | [3] / [8] |
| 151: | GAS DETECTED | [1] / [8] | 407: | REMOTE ARM DOWNLOAD | [3] / [9] |
| 152: | REFRIGERATION | [1] / [9] | 410: | REMOTE ACCESS | [3] / [10] |
| 153: | LOSS OF HEAT | [1] / [10] | 441: | OPEN/CLOSE - STAY MODE | [3] / [11] |
| 154: | WATER LEAKAGE | [1] / [11] | 570: | BYPASS | [3] / [12] |
| 155: | FOIL BREAK ALARM | [1] / [12] | 572: | 24 HOUR ZONE BYPASS | [3] / [BYP] |
| 156: | DAY TROUBLE ALARM | [1] / [BYP] | 573: | BURGLARY BYPASS # | [3] / [MEM] |
| 157: | LOW GAS LEVEL | [1] / [MEM] | 574: | GROUP BYPASS | [3] / [TRBL] |
| 158: | HIGH TEMPERATURE | [1] / [TRBL] | 601: | MANUAL TEST | [4] / [2ND] |
| 159: | LOW TEMPERATURE | [2] / [2ND] | 602: | PERIODIC TEST | [4] / [1] |
| 161: | LOSS AIR FLOW | [2] / [1] | 625: | TIME/DATE RESET | [4] / [2] |

For addresses **044** to **126**, see pages 7 to 10.

**REPORTING CODES:** All digits from **[1]** to **[F]** are valid. **[2ND]** = digit will not be reported except for contact I.D. programmable codes. For single digit reporting enter "skip" (**[2ND]**) as first digit. (Default = “empty" **[2ND] [2ND]**)

**If CONTACT I.D. format (all codes) is selected, addresses 300 to 527 (sections 11- 67) do not have to be programmed.** (Select Contact I.D. (all codes) - key **[10]** for both central station numbers at section **09** - address **038**.)

**ARMING** (closing) **CODES:**

| Streamline section | Data | Description | Address |
|---|---|---|---|
| 11 | ___/___ | Auto / Espload | **300** |
| | ___/___ | Master | **301** |
| | ___/___ | User code 1 | **302** |
| | ___/___ | User code 2 | **303** |
| 12 | ___/___ | User code 3 | **304** |
| | ___/___ | User code 4 | **305** |
| | ___/___ | User code 5 | **306** |
| | ___/___ | User code 6 | **307** |
| 13 | ___/___ | User code 7 | **308** |
| | ___/___ | User code 8 | **309** |
| | ___/___ | User code 9 | **310** |
| | ___/___ | User code 10 | **311** |
| 14 | ___/___ | User code 11 | **312** |
| | ___/___ | User code 12 | **313** |
| | ___/___ | User code 13 | **314** |
| | ___/___ | User code 14 | **315** |
| 15 | ___/___ | User code 15 | **316** |
| | ___/___ | User code 16 | **317** |
| | ___/___ | User code 17 | **318** |
| | ___/___ | User code 18 | **319** |
| 16 | ___/___ | User code 19 | **320** |
| | ___/___ | User code 20 | **321** |
| | ___/___ | User code 21 | **322** |
| | ___/___ | User code 22 | **323** |
| 17 | ___/___ | User code 23 | **324** |
| | ___/___ | User code 24 | **325** |
| | ___/___ | User code 25 | **326** |
| | ___/___ | User code 26 | **327** |

| Streamline section | Data | Description | Address |
|---|---|---|---|
| 18 | ___/___ | User code 27 | **328** |
| | ___/___ | User code 28 | **329** |
| | ___/___ | User code 29 | **330** |
| | ___/___ | User code 30 | **331** |
| 19 | ___/___ | User code 31 | **332** |
| | ___/___ | User code 32 | **333** |
| | ___/___ | User code 33 | **334** |
| | ___/___ | User code 34 | **335** |
| 20 | ___/___ | User code 35 | **336** |
| | ___/___ | User code 36 | **337** |
| | ___/___ | User code 37 | **338** |
| | ___/___ | User code 38 | **339** |
| 21 | ___/___ | User code 39 | **340** |
| | ___/___ | User code 40 | **341** |
| | ___/___ | User code 41 | **342** |
| | ___/___ | User code 42 | **343** |
| 22 | ___/___ | User code 43 | **344** |
| | ___/___ | User code 44 | **345** |
| | ___/___ | User code 45 | **346** |
| | ___/___ | User code 46 | **347** |
| 23 | ___/___ | User code 47 | **348** |
| | ___/___ | User code 48 / (Duress) | **349** |

*See next page*

## REPORTING CODES: *(reset code **"empty"**)*

**DISARMING** (opening) **CODES:**

| Streamline section | Data | Description | Address |
|---|---|---|---|
| | | *See previous page* | |
| 23 | ___/___ | Espload | **350** |
| | ___/___ | Master | **351** |
| 24 | ___/___ | User code 1 | **352** |
| | ___/___ | User code 2 | **353** |
| | ___/___ | User code 3 | **354** |
| | ___/___ | User code 4 | **355** |
| 25 | ___/___ | User code 5 | **356** |
| | ___/___ | User code 6 | **357** |
| | ___/___ | User code 7 | **358** |
| | ___/___ | User code 8 | **359** |
| 26 | ___/___ | User code 9 | **360** |
| | ___/___ | User code 10 | **361** |
| | ___/___ | User code 11 | **362** |
| | ___/___ | User code 12 | **363** |
| 27 | ___/___ | User code 13 | **364** |
| | ___/___ | User code 14 | **365** |
| | ___/___ | User code 15 | **366** |
| | ___/___ | User code 16 | **367** |
| 28 | ___/___ | User code 17 | **368** |
| | ___/___ | User code 18 | **369** |
| | ___/___ | User code 19 | **370** |
| | ___/___ | User code 20 | **371** |
| 29 | ___/___ | User code 21 | **372** |
| | ___/___ | User code 22 | **373** |
| | ___/___ | User code 23 | **374** |
| | ___/___ | User code 24 | **375** |

| Streamline section | Data | Description | Address |
|---|---|---|---|
| 30 | ___/___ | User code 25 | **376** |
| | ___/___ | User code 26 | **377** |
| | ___/___ | User code 27 | **378** |
| | ___/___ | User code 28 | **379** |
| 31 | ___/___ | User code 29 | **380** |
| | ___/___ | User code 30 | **381** |
| | ___/___ | User code 31 | **382** |
| | ___/___ | User code 32 | **383** |
| 32 | ___/___ | User code 33 | **384** |
| | ___/___ | User code 34 | **385** |
| | ___/___ | User code 35 | **386** |
| | ___/___ | User code 36 | **387** |
| 33 | ___/___ | User code 37 | **388** |
| | ___/___ | User code 38 | **389** |
| | ___/___ | User code 39 | **390** |
| | ___/___ | User code 40 | **391** |
| 34 | ___/___ | User code 41 | **392** |
| | ___/___ | User code 42 | **393** |
| | ___/___ | User code 43 | **394** |
| | ___/___ | User code 44 | **395** |
| 35 | ___/___ | User code 45 | **396** |
| | ___/___ | User code 46 | **397** |
| | ___/___ | User code 47 | **398** |
| | ___/___ | User code 48 / (Duress) | **399** |

**ALARM CODES ZONES 1 TO 12:**

| Streamline section | Data | Description | Address |
|---|---|---|---|
| 36 | ___/___ | Zone 1 | **400** |
| | ___/___ | Zone 2 | **401** |
| | ___/___ | Zone 3 ***(fire add. 100)*** | **402** |
| | ___/___ | Zone 4 | **403** |
| 37 | ___/___ | Zone 5 | **404** |
| | ___/___ | Zone 6 | **405** |
| | ___/___ | Zone 7 | **406** |
| | ___/___ | Zone 8 | **407** |
| 38 | ___/___ | Zone 9 | **408** |
| | ___/___ | Zone 10 | **409** |
| | ___/___ | Zone 11 | **410** |
| | ___/___ | Zone 12 | **411** |

**ALARM CODES ZONES 13 TO 24:**

| Streamline section | Data | Description | Address |
|---|---|---|---|
| 39 | ___/___ | Zone 13 (Kyp zone 1) | **412** |
| | ___/___ | Zone 14 (Kyp zone 2) | **413** |
| | ___/___ | Zone 15 | **414** |
| | ___/___ | Zone 16 | **415** |
| 40 | ___/___ | Zone 17 | **416** |
| | ___/___ | Zone 18 | **417** |
| | ___/___ | Zone 19 | **418** |
| | ___/___ | Zone 20 | **419** |
| 41 | ___/___ | Zone 21 | **420** |
| | ___/___ | Zone 22 | **421** |
| | ___/___ | Zone 23 | **422** |
| | ___/___ | Zone 24 | **423** |

## REPORTING CODES: *(reset code **"empty"**)*

### ZONES 1 TO 12 RESTORE CODES:

| Streamline section | Data | Description | Address |
|---|---|---|---|
| 42 | ___/___ | Zone 1 | **424** |
| | ___/___ | Zone 2 | **425** |
| | ___/___ | Zone 3 ***(fire add. 100)*** | **426** |
| | ___/___ | Zone 4 | **427** |
| 43 | ___/___ | Zone 5 | **428** |
| | ___/___ | Zone 6 | **429** |
| | ___/___ | Zone 7 | **430** |
| | ___/___ | Zone 8 | **431** |
| 44 | ___/___ | Zone 9 | **432** |
| | ___/___ | Zone 10 | **433** |
| | ___/___ | Zone 11 | **434** |
| | ___/___ | Zone 12 | **435** |

### ZONES 13 TO 24 RESTORE CODES:

| Streamline section | Data | Description | Address |
|---|---|---|---|
| 45 | ___/___ | Zone 13 (Kyp zone 1) | **436** |
| | ___/___ | Zone 14 (Kyp zone 2) | **437** |
| | ___/___ | Zone 15 | **438** |
| | ___/___ | Zone 16 | **439** |
| 46 | ___/___ | Zone 17 | **440** |
| | ___/___ | Zone 18 | **441** |
| | ___/___ | Zone 19 | **442** |
| | ___/___ | Zone 20 | **443** |
| 47 | ___/___ | Zone 21 | **444** |
| | ___/___ | Zone 22 | **445** |
| | ___/___ | Zone 23 | **446** |
| | ___/___ | Zone 24 | **447** |

### ZONE 1 TO 12 SHUTDOWN CODES:

| Streamline section | Data | Description | Address |
|---|---|---|---|
| 48 | ___/___ | Zone 1 | **448** |
| | ___/___ | Zone 2 | **449** |
| | ___/___ | Zone 3 | **450** |
| | ___/___ | Zone 4 | **451** |
| 49 | ___/___ | Zone 5 | **452** |
| | ___/___ | Zone 6 | **453** |
| | ___/___ | Zone 7 | **454** |
| | ___/___ | Zone 8 | **455** |
| 50 | ___/___ | Zone 9 | **456** |
| | ___/___ | Zone 10 | **457** |
| | ___/___ | Zone 11 | **458** |
| | ___/___ | Zone 12 | **459** |

### ZONE 13 TO 24 SHUTDOWN CODES:

| Streamline section | Data | Description | Address |
|---|---|---|---|
| 51 | ___/___ | Zone 13 (Kyp zone 1) | **460** |
| | ___/___ | Zone 14 (Kyp zone 2) | **461** |
| | ___/___ | Zone 15 | **462** |
| | ___/___ | Zone 16 | **463** |
| 52 | ___/___ | Zone 17 | **464** |
| | ___/___ | Zone 18 | **465** |
| | ___/___ | Zone 19 | **466** |
| | ___/___ | Zone 20 | **467** |
| 53 | ___/___ | Zone 21 | **468** |
| | ___/___ | Zone 22 | **469** |
| | ___/___ | Zone 23 | **470** |
| | ___/___ | Zone 24 | **471** |

### TAMPER 1 TO 12 TROUBLE CODES:

| Streamline section | Data | Description | Address |
|---|---|---|---|
| 54 | ___/___ | Tamper 1 | **472** |
| | ___/___ | Tamper 2 | **473** |
| | ___/___ | Tamper 3 | **474** |
| | ___/___ | Tamper 4 | **475** |
| 55 | ___/___ | Tamper 5 | **476** |
| | ___/___ | Tamper 6 | **477** |
| | ___/___ | Tamper 7 | **478** |
| | ___/___ | Tamper 8 | **479** |
| 56 | ___/___ | Tamper 9 | **480** |
| | ___/___ | Tamper 10 | **481** |
| | ___/___ | Tamper 11 | **482** |
| | ___/___ | Tamper 12 | **483** |

Addresses **484-495** reserved for future use

### TROUBLE CODES:

| Streamline section | Data | Description | Address |
|---|---|---|---|
| 60 | ___/___ | Max. auxiliary current | **496** |
| | ___/___ | Bell disconnect / max. bell current | **497** |
| | ___/___ | Battery disconnect / low voltage | **498** |
| | ___/___ | Power failure | **499** |
| 61 | ___/___ | Fire loop trouble | **500** |
| | ___/___ | Timer loss | **501** |
| | [2ND]/[2ND] | Future Use | **502** |
| | [2ND]/[2ND] | Future Use | **503** |

**TROUBLE RESTORE CODES:**

| Streamline section | Data | Description | Address |
|---|---|---|---|
| 62 | ___/___ | Max. auxiliary current | **504** |
| | ___/___ | Bell disconnect | **505** |
| | ___/___ | Battery disconnect / low voltage | **506** |
| | ___/___ | Power failure | **507** |

| Streamline section | Data | Description | Address |
|---|---|---|---|
| 63 | ___/___ | Fire loop trouble | **508** |
| | ___/___ | Timer programmed | **509** |
| | ___/___ | Tamper / wiring fault | **510** |
| | ___/___ | TLM trouble restore | **511** |

**SPECIAL CODES:**

| Streamline section | Data | Description | Address |
|---|---|---|---|
| 64 | ___/___ | Test report | **512** |
| | ___/___ | Panic 1 | **513** |
| | ___/___ | Panic 2 | **514** |
| | ___/___ | Panic 3 | **515** |
| 65 | ___/___ | Late to close | **516** |
| | ___/___ | No movement | **517** |
| | ___/___ | Partial arming | **518** |
| | ___/___ | Recent close | **519** |

| Streamline section | Data | Description | Address |
|---|---|---|---|
| 66 | ___/___ | Duress | **520** |
| | [2ND]/[2ND] | Future Use | **521** |
| | [2ND]/[2ND] | Future Use | **522** |
| | [2ND]/[2ND] | Future Use | **523** |
| 67 | ___/___ | Log-in (Espload) | **524** |
| | ___/___ | Program change | **525** |
| | [2ND]/[2ND] | Future Use | **526** |
| | [2ND]/[2ND] | Future Use | **527** |

## DECIMAL PROGRAMMING

1) Press **[ENTER] +** *Installer Code (default: **484848**)*
2) The [ENTER] key will flash to indicate you are in programming mode
3) Enter **3-digit address** (044-061)
4) The keypad will now display the current 3-digit data currently saved at this address as described in figure 3
5) Enter **3-digit data** (000-255) value; after entering data you do not need to press **[ENTER]**, the software will automatically save the data into the selected address
6) Return to **step 2** or press **[CLEAR]** to exit programming mode

**FIGURE 3**

**DECIMAL DISPLAY FOR LED KEYPADS**

Note: LCD keypads will display current data on the screen.

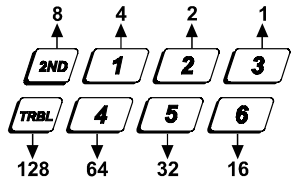


Each key in the first 2 rows of the keypad represents a specific value when the key is lit, as shown above. When the key isn't lit, the key represents 0. Add the values of the lit keys to obtain the entered data value as shown in the example below.

Example

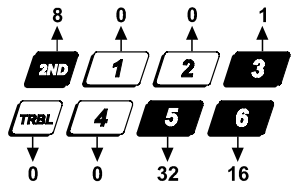


Therefore 8 + 1 + 32 + 16 = 057

**044:** ___/___/___ (hours) Auto arm time (between "000" and "023")

**045:** ___/___/___ (minutes) Auto arm time (between "000" and "059")

**046:** ___/___/___ (days) Auto test report every ? days (between "001" and "255") (000 = disabled)

**047:** ___/___/___ (hours) Auto test report (between "000" and "023")

**048:** ___/___/___ (minutes) Auto test report (between "000" and "059")

**049:** ___/___/___ (seconds) Exit delay *(factory default **60** seconds)*

**050:** ___/___/___ (seconds) Entry delay 1 *(factory default **45** seconds)*

**051:** ___/___/___ (seconds) Entry delay 2 *(factory default **45** seconds)*

**052:** ___/___/___ (minutes) Bell cut-off time *(factory default **5** minutes)*

**053:** ___/___/___ ( x 15 mSec.) Zone speed *(factory default **600** mSec.)*

**054:** ___/___/___ (minutes) Power failure report delay *(factory default **30** minutes)* (000 = disabled)

**055:** ___/___/___ ( x 15 minutes) "No movement" report time *(factory default **8** hours)* (000 = disabled)

**056:** ___/___/___ PGM timer setting (001 to 127 for seconds and 129 to 255 for minutes) *(factory default **5** seconds)*
Add 128 to desired value in minutes (i.e. for 5 minutes: enter 5 + 128 = 133)

**057:** ___/___/___ Intellizone delay (in seconds, minimum = 10 seconds) *(factory default **48** seconds)*

**058:** ___/___/___ Installer code lock (147 = locked, 000 = unlocked)

**059:** ___/___/___ (seconds) Programmable delay before alarm transmission (5 to 63 seconds) (000 = disabled)

**060:** ___/___/___ (seconds) Recent closing delay (000 = disabled)

**061:** ___/___/___ Future Use

# FEATURE SELECT PROGRAMMING

Addresses 062 to 126 are programmed using the Feature Select Programming method. In this method, every key on the keypad in each address represents an option or feature. Pressing a key will display it on the keypad and pressing it again will extinguish the key. The On/Off status of each key determines the selected feature. To program using the Feature Select Programming method:

1) Press **[ENTER]** + *Installer Code (default: **484848**)*
2) The [ENTER] key will flash to indicate you are in programming mode
3) Enter **3-digit address** (062-126)
4) After entering the address, the keypad will display the feature selection status. Turn the keys On/Off by pressing the appropriate key until the desired options are set. Then press the **[ENTER]** key to accept, there will be a confirmation "beep" indicating the options have been accepted. The [ENTER] key will flash to indicate that the software is awaiting the next address entry
5) Return to **step 3** to continue programming or press **[CLEAR]** to exit programming mode

**CODE PRIORITY**

| | KEY SELECT: | [1] | [2] | [3] | [4] | [5] | [6] | [7] | [8] | [9] | [10] | [11] | [12] | [BYP] | [MEM] | [TRBL] | [2ND] |
|---|---|---|---|---|---|---|---|---|---|---|---|---|---|---|---|---|---|
| **062:** | User #: | 1 | 2 | 3 | 4 | 5 | 6 | 7 | 8 | 9 | 10 | 11 | 12 | 13 | 14 | 15 | 16 |
| | **SYSTEM "A" / STAY** | ☐ | ☐ | ☐ | ☐ | ☐ | ☐ | ☐ | ☐ | ☐ | ☐ | ☐ | ☐ | ☐ | ☐ | ☐ | ☐ |
| **064:** | User #: | 17 | 18 | 19 | 20 | 21 | 22 | 23 | 24 | 25 | 26 | 27 | 28 | 29 | 30 | 31 | 32 |
| | **SYSTEM "A" / STAY** | ☐ | ☐ | ☐ | ☐ | ☐ | ☐ | ☐ | ☐ | ☐ | ☐ | ☐ | ☐ | ☐ | ☐ | ☐ | ☐ |
| **066:** | User #: | 33 | 34 | 35 | 36 | 37 | 38 | 39 | 40 | 41 | 42 | 43 | 44 | 45 | 46 | 47 | 48 |
| | **SYSTEM "A" / STAY** | ☐ | ☐ | ☐ | ☐ | ☐ | ☐ | ☐ | ☐ | ☐ | ☐ | ☐ | ☐ | ☐ | ☐ | ☐ | ☐ |
| **068:** | User #: | 1 | 2 | 3 | 4 | 5 | 6 | 7 | 8 | 9 | 10 | 11 | 12 | 13 | 14 | 15 | 16 |
| | **SYSTEM "B" / AWAY** | ☐ | ☐ | ☐ | ☐ | ☐ | ☐ | ☐ | ☐ | ☐ | ☐ | ☐ | ☐ | ☐ | ☐ | ☐ | ☐ |
| **070:** | User #: | 17 | 18 | 19 | 20 | 21 | 22 | 23 | 24 | 25 | 26 | 27 | 28 | 29 | 30 | 31 | 32 |
| | **SYSTEM "B" / AWAY** | ☐ | ☐ | ☐ | ☐ | ☐ | ☐ | ☐ | ☐ | ☐ | ☐ | ☐ | ☐ | ☐ | ☐ | ☐ | ☐ |
| **072:** | User #: | 33 | 34 | 35 | 36 | 37 | 38 | 39 | 40 | 41 | 42 | 43 | 44 | 45 | 46 | 47 | 48 |
| | **SYSTEM "B" / AWAY** | ☐ | ☐ | ☐ | ☐ | ☐ | ☐ | ☐ | ☐ | ☐ | ☐ | ☐ | ☐ | ☐ | ☐ | ☐ | ☐ |
| **074:** | User #: | 1 | 2 | 3 | 4 | 5 | 6 | 7 | 8 | 9 | 10 | 11 | 12 | 13 | 14 | 15 | 16 |
| | **Codes with bypass access** | ☐ | ☐ | ☐ | ☐ | ☐ | ☐ | ☐ | ☐ | ☐ | ☐ | ☐ | ☐ | ☐ | ☐ | ☐ | ☐ |
| **076:** | User #: | 17 | 18 | 19 | 20 | 21 | 22 | 23 | 24 | 25 | 26 | 27 | 28 | 29 | 30 | 31 | 32 |
| | **Codes with bypass access** | ☐ | ☐ | ☐ | ☐ | ☐ | ☐ | ☐ | ☐ | ☐ | ☐ | ☐ | ☐ | ☐ | ☐ | ☐ | ☐ |
| **078:** | User #: | 33 | 34 | 35 | 36 | 37 | 38 | 39 | 40 | 41 | 42 | 43 | 44 | 45 | 46 | 47 | 48 |
| | **Codes with bypass access** | ☐ | ☐ | ☐ | ☐ | ☐ | ☐ | ☐ | ☐ | ☐ | ☐ | ☐ | ☐ | ☐ | ☐ | ☐ | ☐ |

Addresses **080** to **085** for future use.

# FEATURE SELECT PROGRAMMING (continued)

*(On/off status of key lights determines which feature is selected.)*

## 086:

| | KEY OFF / ON | | |
|---|---|---|---|
| See "TLM" table | [2ND] | [1] | |
| PS1/Keyswitch = regular arm | [2] | | stay arm / System A |
| PS1/keyswitch arming | [3] | | enabled |
| Call back | [4] | | enabled |
| Auto arm on time | [5] | | enabled |
| Auto arm on no movement | [6] | | enabled |
| Pulse dialing | [7] | | Tone dialing (DTMF) |
| Partitioning | [8] | | enabled |
| Silent zone/panic generates a silent alarm | [9] | | generates only a report |
| (1:2) Pulse Europe | [10] | | (1:1.5) Pulse USA |
| See "Reporting" table | [11] | [12] | |
| N/A | [BYP] | | N/A |
| Bell squawk on arm/disarm | [MEM] | | enabled |
| Auto zone shutdown | [TRBL] | | enabled |

### TELEPHONE LINE MONITOR

**Address 086, Key [2ND] [1]**

| KEY [2ND] | [1] | |
|---|---|---|
| OFF | OFF | — TLM disabled |
| OFF | ON | — TLM generates trouble only |
| ON | OFF | — generates an alarm if armed |
| ON | ON | — silent alarm becomes audible |

(address **086**, key **[9]** has to be **OFF**)

### REPORTING OPTIONS

**Address 086, Key [11] [12]**

| KEY [11] | [12] | TYPE | DIALING SEQUENCE (tel. No.) |
|---|---|---|---|
| OFF | OFF | – Reporting disabled | |
| OFF | ON | – Regular reporting | – 1,2,1,2,1,2,1,2, fail to comm. |
| ON | OFF | – Split reporting: Alarms* | – 1,1,1,1,1,1,1,1, fail to comm. |
| | | System report | – 2,2,2,2,2,2,2,2, fail to comm. |
| ON | ON | – Double reporting | – 1,1,1,1,1,1,1,1, fail to comm., 2,2,2,2,2,2,2,2, fail to comm. |

*On alarm, all reports are made to Tel. #1 until system is disarmed. (Once disarmed, system reports are made to Tel. #2)

## 088:

| | KEY OFF / ON | | |
|---|---|---|---|
| Automatic event buffer transmission | [2ND] | | enabled |
| Panic 1 (keys **[1]** & **[3]**, PS1) | [1] | | enabled |
| Panic 2 (keys **[4]** & **[6]**) | [2] | | enabled |
| Panic 3 (keys **[7]** & **[9]**) | [3] | | enabled |
| Panic 1 silent (PS1) | [4] | | audible |
| Panic 2 silent | [5] | | audible |
| Panic 3 silent | [6] | | fire |
| Key **[10]** regular arm | [7] | | enabled |
| Key **[11]** stay or system A arm | [8] | | enabled |
| 6 digit access codes | [9] | | 4 digit |
| Tamper Recognition | [10] | [11] | |
| Beep on exit delay | [12] | | enabled |
| Report zone restore on bell cut-off | [BYP] | | on zone closure |
| Zones with EOL (1KΩ) | [MEM] | | no EOL |
| Always report disarm | [TRBL] | | only after alarm |

### TAMPER / WIRE FAULT DEFINITIONS

**Address 088, Key [10] [11]**

| SYSTEM ARMED | KEY [10] | [11] | SYSTEM DISARMED* |
|---|---|---|---|
| Alarm as per individual zone definitions | – OFF | OFF | – Tamper supervision disabled |
| Always generate trouble and alarm, audible or silent as per individual zone definitions | OFF | ON | – No alarm, trouble code reported |
| | ON | OFF | – Silent alarm. Trouble and alarm codes reported |
| | ON | ON | – Audible alarm. Trouble and alarm codes reported** |

* Exception: for 24 hour zones the tamper definition will follow the audible/silent alarm definition of the 24 hour zone.

** Silent zones will generate a silent alarm.

## 090:

| | KEY OFF / ON | | |
|---|---|---|---|
| Exclude power failure from trouble display | [2ND] | | enabled |
| Zone 15 enabled | [1] | | disabled (in case of fire zone 3 only) |
| Auto arm = regular arm | [2] | | stay / System A |
| N/A | [3] | | N/A |
| N/A | [4] | | N/A |
| N/A | [5] | | N/A |
| No tamper bypass | [6] | | tamper follows zone bypass definition |
| N/A | [7] | | N/A |
| Zone doubling (ATZ) | [8] | | enabled |
| Audible trouble warning | [9] | | enabled |
| Duress | [10] | | enabled |
| Keypad 1 zone supervision | [11] | | enabled |
| Keypad 2 zone supervision | [12] | | enabled |
| N/A | [BYP] | | N/A |
| N/A | [MEM] | | N/A |
| N/A | [TRBL] | | N/A |

**ZONE DEFINITION:** *(reset = "**OFF**")*

| KEY SELECT: | [1] | [2] | [3] | [4] | [5] | [6] | [7] | [8] | [9] | [10] | [11] | [12] | | [1] | [2] | [3] | [4] | [5] | [6] | [7] | [8] | [9] | [10] | [11] | [12] |
|---|---|---|---|---|---|---|---|---|---|---|---|---|---|---|---|---|---|---|---|---|---|---|---|---|---|
| | 1 | 2 | 3 | 4 | 5 | 6 | 7 | 8 | 9 | 10 | 11 | 12 | | 13 | 14 | 15 | 16 | 17 | 18 | 19 | 20 | 21 | 22 | 23 | 24 |
| **Intellizone** = ON **092** | ☐ | ☐ | ☐ | ☐ | ☐ | ☐ | ☐ | ☐ | ☐ | ☐ | ☐ | ☐ | **094** | ☐ | ☐ | ☐ | ☐ | ☐ | ☐ | ☐ | ☐ | ☐ | ☐ | ☐ | ☐ |
| | 1 | 2 | 3 | 4 | 5 | 6 | 7 | 8 | 9 | 10 | 11 | 12 | | 13 | 14 | 15 | 16 | 17 | 18 | 19 | 20 | 21 | 22 | 23 | 24 |
| **Silent** = ON **096** | ☐ | ☐ | ☐ | ☐ | ☐ | ☐ | ☐ | ☐ | ☐ | ☐ | ☐ | ☐ | **098** | ☐ | ☐ | ☐ | ☐ | ☐ | ☐ | ☐ | ☐ | ☐ | ☐ | ☐ | ☐ |
| | 1 | 2 | 3🔥 | 4 | 5 | 6 | 7 | 8 | 9 | 10 | 11 | 12 | | 13 | 14 | 15 | 16 | 17 | 18 | 19 | 20 | 21 | 22 | 23 | 24 |
| **24HR./Fire** = ON **100** | ☐ | ☐ | ☐ | ☐ | ☐ | ☐ | ☐ | ☐ | ☐ | ☐ | ☐ | ☐ | **102** | ☐ | ☐ | ☐ | ☐ | ☐ | ☐ | ☐ | ☐ | ☐ | ☐ | ☐ | ☐ |
| 🔥 When zone 3 is defined "24 Hour" it becomes a fire zone | | | | | | | | | | | | | | | | | | | | | | | | | |
| | 1 | 2 | 3 | 4 | 5 | 6 | 7 | 8 | 9 | 10 | 11 | 12 | | 13 | 14 | 15 | 16 | 17 | 18 | 19 | 20 | 21 | 22 | 23 | 24 |
| **Instant** = ON **104** | ☐ | ☐ | ☐ | ☐ | ☐ | ☐ | ☐ | ☐ | ☐ | ☐ | ☐ | ☐ | **106** | ☐ | ☐ | ☐ | ☐ | ☐ | ☐ | ☐ | ☐ | ☐ | ☐ | ☐ | ☐ |
| | 1 | 2 | 3 | 4 | 5 | 6 | 7 | 8 | 9 | 10 | 11 | 12 | | 13 | 14 | 15 | 16 | 17 | 18 | 19 | 20 | 21 | 22 | 23 | 24 |
| **Follow** = ON **108** | ☐ | ☐ | ☐ | ☐ | ☐ | ☐ | ☐ | ☐ | ☐ | ☐ | ☐ | ☐ | **110** | ☐ | ☐ | ☐ | ☐ | ☐ | ☐ | ☐ | ☐ | ☐ | ☐ | ☐ | ☐ |
| | 1 | 2 | 3 | 4 | 5 | 6 | 7 | 8 | 9 | 10 | 11 | 12 | | 13 | 14 | 15 | 16 | 17 | 18 | 19 | 20 | 21 | 22 | 23 | 24 |
| **Delay 2** = ON **112** | ☐ | ☐ | ☐ | ☐ | ☐ | ☐ | ☐ | ☐ | ☐ | ☐ | ☐ | ☐ | **114** | ☐ | ☐ | ☐ | ☐ | ☐ | ☐ | ☐ | ☐ | ☐ | ☐ | ☐ | ☐ |
| | | | | | | **System A / STAY** | | | | | | | | | | | | | **System A / STAY** | | | | | | |
| **If ON, zone is armed on stay or "system A" arming** | 1 | 2 | 3 | 4 | 5 | 6 | 7 | 8 | 9 | 10 | 11 | 12 | | 13 | 14 | 15 | 16 | 17 | 18 | 19 | 20 | 21 | 22 | 23 | 24 |
| **116** | ☐ | ☐ | ☐ | ☐ | ☐ | ☐ | ☐ | ☐ | ☐ | ☐ | ☐ | ☐ | **118** | ☐ | ☐ | ☐ | ☐ | ☐ | ☐ | ☐ | ☐ | ☐ | ☐ | ☐ | ☐ |
| | | | | | | **System B** | | | | | | | | | | | | | **System B** | | | | | | |
| **If ON, zone is armed in "system B" arming** | 1 | 2 | 3 | 4 | 5 | 6 | 7 | 8 | 9 | 10 | 11 | 12 | | 13 | 14 | 15 | 16 | 17 | 18 | 19 | 20 | 21 | 22 | 23 | 24 |
| **120** | ☐ | ☐ | ☐ | ☐ | ☐ | ☐ | ☐ | ☐ | ☐ | ☐ | ☐ | ☐ | **122** | ☐ | ☐ | ☐ | ☐ | ☐ | ☐ | ☐ | ☐ | ☐ | ☐ | ☐ | ☐ |
| | 1 | 2 | 3 | 4 | 5 | 6 | 7 | 8 | 9 | 10 | 11 | 12 | | 13 | 14 | 15 | 16 | 17 | 18 | 19 | 20 | 21 | 22 | 23 | 24 |
| **Bypass enable** = ON **124** | ☐ | ☐ | ☐ | ☐ | ☐ | ☐ | ☐ | ☐ | ☐ | ☐ | ☐ | ☐ | **126** | ☐ | ☐ | ☐ | ☐ | ☐ | ☐ | ☐ | ☐ | ☐ | ☐ | ☐ | ☐ |

Zones that are not selected at addresses **100** to **114** become "Delay 1" zones.

**Note:** Do not use the Intellizone feature and an entry delay for the same zone, otherwise an alarm may occur as a user tries to disarm the system.

## KEY ACCESS PROGRAMMING

Programs features quickly, without entering addresses or section numbers.
To activate "key access programming", press **[ENTER]**, followed by installer, master or user code 1. (Code required depends on the feature you wish to access - see below.) Press the key corresponding to the desired feature.
Press **[ENTER]** or **[CLEAR]** to exit.

***key***

**[8]** **Installer test mode** *(installer code only)*
In installer test mode, a confirmation beep (intermittent) indicates test is "on", a "rejection" beep (long) indicates test is "off". The bell will squawk during walk testing to indicate opened, functional zones.

**[9]** **"Auto arming" time program** *(all 3 codes)*
Key [9] flashes. Enter two digits (00 to 23) for hours + 2 digits (00 to 59) for minutes.

**[MEM]** **"Panel time" and clear "trouble 8"** *(all 3 codes)*
Key **[MEM]** flashes. Enter two digits (00 to 23) for hours + 2 digits (00 to 59) for minutes.

**[BYP]** **Test report** *(all 3 codes)*
Reporting is enabled at address **086**, keys **[11]**, **[12]**. A value must be entered at address **512**, and both telephone and account numbers must be programmed.

**[TRBL]** **Call Espload via telephone** *(all 3 codes)*
Panel identifier and PC password (addresses **004-007**) and computer telephone number (addresses **008**-**015**) must be programmed.

**[AWAY]** **Answer Espload** *(all 3 codes)*
This feature is available when using the ADP-1 adapter. In Espload, "blind dial" must be activated in "modem setup" section, and panel phone number programmed (works also without ADP-1).

**[STAY]** **Cancel communication attempts** *(master code and user 1 can only stop calls to Espload)*
Until next reportable event *(installer code - all communications)*

When communicating with Espload, it is impossible to enter programming mode.

# CONNECTION DIAGRAMS

The system hardware will recognize the following zone conditions:

## SINGLE ZONE CONNECTIONS

### *N.C. Contacts, Without EOL Resistor*

**FIGURE 4**

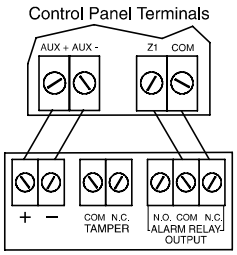


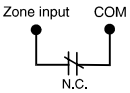


Address 088, [MEM] = "on" (no EOL resistor)
[10] = "off" } Tamper/Wire Fault
[11] = "off" } Disabled
Address 090, [8] = "off" (ATZ disabled)

### *N.C. Contacts, With EOL Resistor (UL)*

**FIGURE 5**

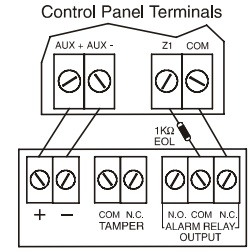


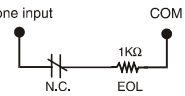


Address 088, [MEM] = "off" (EOL resistor enabled)
[10] = "off" } Tamper/Wire Fault
[11] = "off" } Disabled
Address 090, [8] = "off" (ATZ disabled)

### *N.O. Contacts, With EOL Resistor (UL)*

**FIGURE 6**

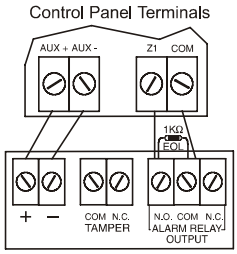


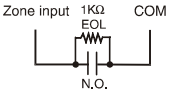


Address 088, [MEM] = "off" (EOL resistor enabled)
[10] = "off" } Tamper/Wire Fault
[11] = "off" } Disabled
Address 090, [8] = "off" (ATZ disabled)

### *N.C Contacts, Without EOL Resistor, With Tamper Recognition*

**FIGURE 7**

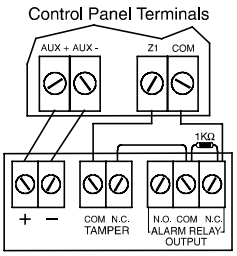


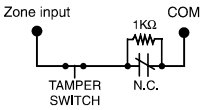


Address 088, [MEM] = "on" (EOL resistor disabled)
[10] = (See figure 9 for Tamper/Wire
[11] = Fault Recognition Options)
Address 090, [8] = "off" (ATZ disabled)

### *N.C. Contacts, With EOL Resistor, With Tamper and Wire Fault Recognition (UL)*

**FIGURE 8**

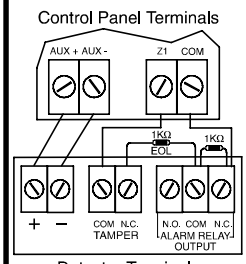


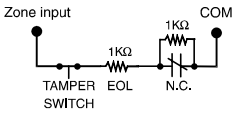


Address 088, [MEM] = "off" (EOL resistor enabled)
[10] = (See figure 9 for Tamper/Wire
[11] = Fault Recognition Options)
Address 090, [8] = "off" (ATZ disabled)

**FIGURE 9**

**TAMPER / WIRE FAULT DEFINITIONS**

**Address 088, Key [10] [11]**

| SYSTEM ARMED | KEY [10] | KEY [11] | SYSTEM DISARMED* |
|---|---|---|---|
| Alarm as per individual zone definitions | OFF | OFF | Tamper supervision disabled |
| Always generate trouble and alarm, audible or silent as per individual zone definitions | OFF | ON | No alarm, trouble code reported |
| | ON | OFF | Silent alarm. Trouble and alarm codes reported |
| | ON | ON | Audible alarm. Trouble and alarm codes reported** |

* Exception: for 24 hour zones the tamper definition will follow the audible/silent alarm definition of the 24 hour zone.

** Silent zones will generate a silent alarm.

# CONNECTION DIAGRAMS (continued)

## ADVANCED TECHNOLOGY ZONE CONNECTIONS (2 zones / input)

FIGURE 10

**Zone Recognition for 748+ control panel with ATZ enabled**

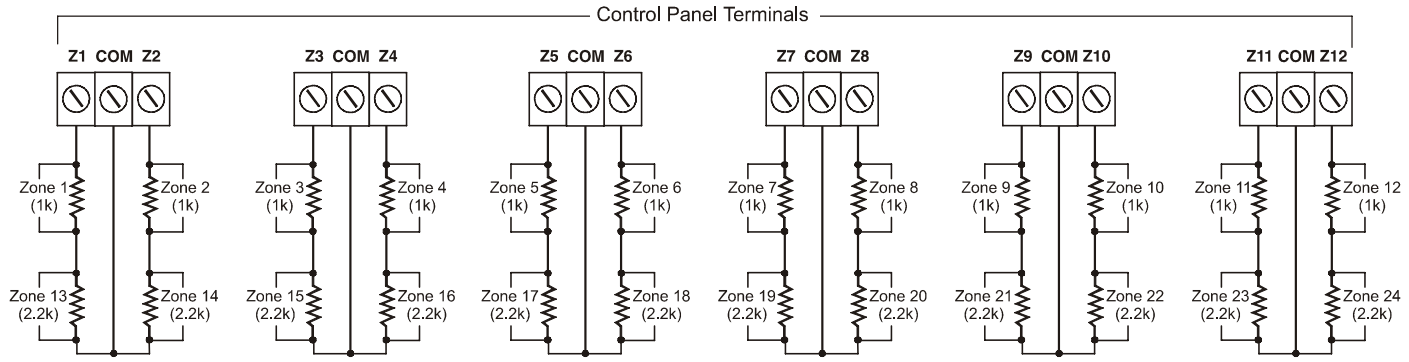


### *N.C. Contacts, Without EOL Resistor*

FIGURE 11

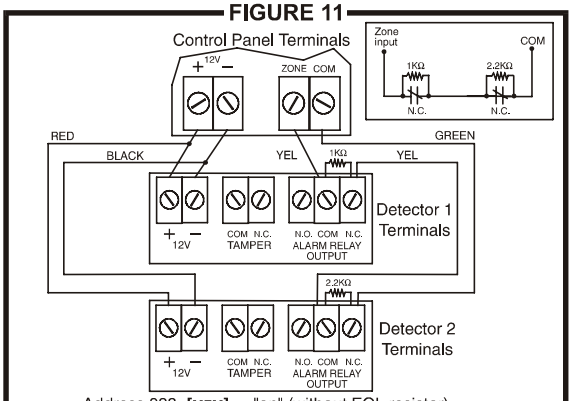


Address 088, [MEM] = "on" (without EOL resistor)
[10] = "off" } Tamper/Wire Fault Disabled
[11] = "off"
Address 090, [8] = "on" (ATZ enabled)

### *N.C. Contacts, Without EOL Resistor, With Tamper Recognition*

FIGURE 12

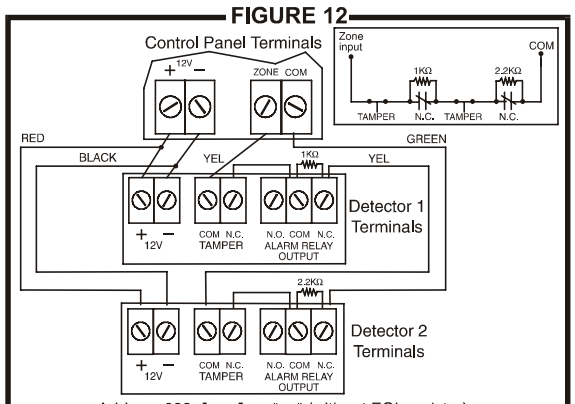


Address 088, [MEM] = "on" (without EOL resistor)
[10] } See figure 9 for Tamper/Wire
[11] } Fault Recognition Options
Address 090, [8] = "on" (ATZ enabled)

### *N.C. Contacts, With EOL Resistor, With Tamper & Wire Fault Recognition (UL)*

FIGURE 13

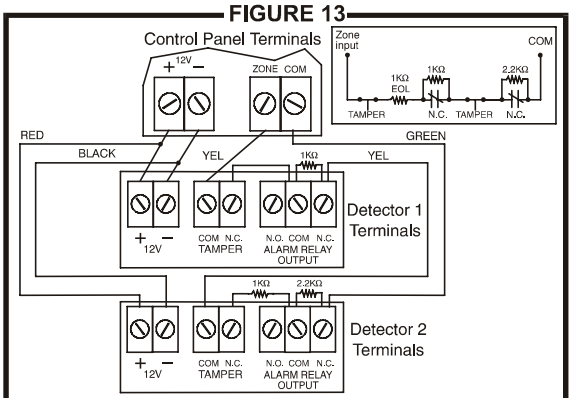


Address 088, [MEM] = "off (with EOL resistor)
[10] } See figure 9 for Tamper/Wire Fault
[11] } Recognition Options
Address 090, [8] = "on" (ATZ enabled)

# KEYPAD ZONE CONNECTION DIAGRAMS

Note: Keypad zones always use (1K OHM) EOL resistor.

**FIGURE 14**

***ONE KEYPAD / ONE ZONE***

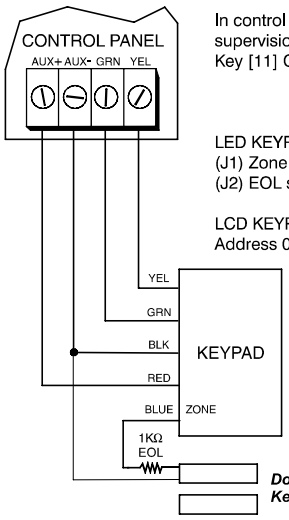


In control panel enable keypad supervision at address 090
Key [11] ON = keypad zone 1

LED KEYPADS:
(J1) Zone select jumper OFF
(J2) EOL select jumper ON

LCD KEYPADS:
Address 032; Key [2] OFF

***Door Contact***
***Keypad zone 1***

**FIGURE 15**

***TWO KEYPADS / TWO ZONES***

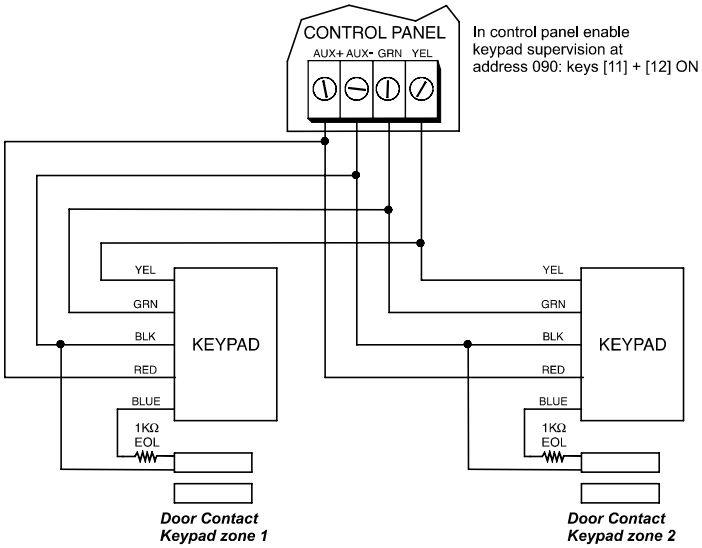


In control panel enable keypad supervision at address 090: keys [11] + [12] ON

***Door Contact***
***Keypad zone 1***

***Door Contact***
***Keypad zone 2***

***Keypad Zone 1***

***LED KEYPAD:*** ***(J1) Zone select Jumper OFF***
***(J2) EOL select jumper ON***
***LCD KEYPADS:*** ***Keypad Address 032;***
***key [2] OFF***

***Keypad Zone 2***

***LED KEYPAD:*** ***(J1) Zone select Jumper ON***
***(J2) EOL select jumper ON***
***LCD KEYPADS:*** ***Keypad Address 032;***
***key [2] ON***

**FIGURE 16**

***639 LCD KEYPAD***
***ONE KEYPAD (W/ATZ) / TWO ZONES***

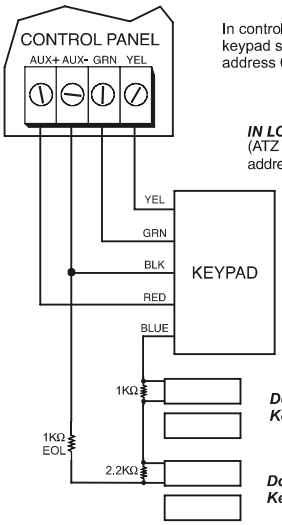


In control panel enable keypad supervision address 090 key [11] + [12] ON

***IN LCD KEYPAD***
(ATZ enabled: keypad address 032 key **[1]**: on)

***Door Contact***
***Keypad zone 1***

***Door Contact***
***Keypad zone 2***

***KEYPAD TAMPER SWITCH***

NOTE: To connect the keypad's tamper switch, simply connect the keypad as shown below. If the cover is removed when the system is armed, the keypad will send a zone open and the control panel will generate an alarm.

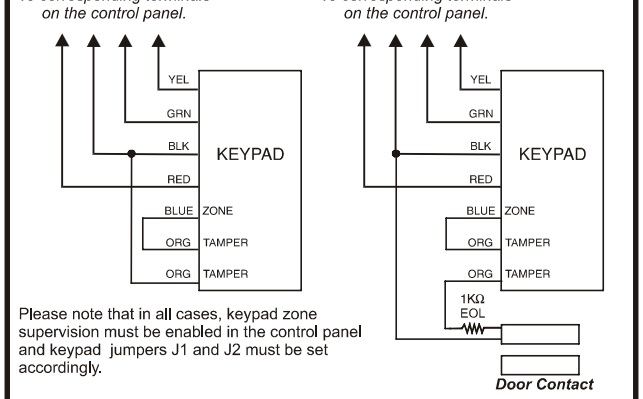


Please note that in all cases, keypad zone supervision must be enabled in the control panel and keypad jumpers J1 and J2 must be set accordingly.

**Connecting keypad tamper when no detection device is used.**

**Connecting keypad tamper when using keypad zone.**

**Keypad Zone Recognition**

Kpd Zone 1 = Zone [13]
Kpd Zone 2 = Zone [14]

If using an LED keypad simply set the Zone Select Jumper at the back of the keypad:
Zone Select Jumper "OFF" = Keypad Zone 1
Zone Select Jumper "ON" = Keypad Zone 2
Note: If the zone select jumper is changed, the control panel will only recognize the change when the keypad is disconnected and re-connected.

If using an LCD keypad with ATZ disabled, program the keypad definition as follows:
LCD Keypad Address 032; Key [2] "OFF" = Keypad Zone 1
LCD Keypad Address 032; Key [2] "ON" = Keypad Zone 2

Note: When the ATZ feature is enabled in the control panel, it will not be able to distinguish between zone 13 and keypad zone 1 and between zone 14 and keypad zone 2.

# ESPRIT 748+ WIRING DIAGRAM

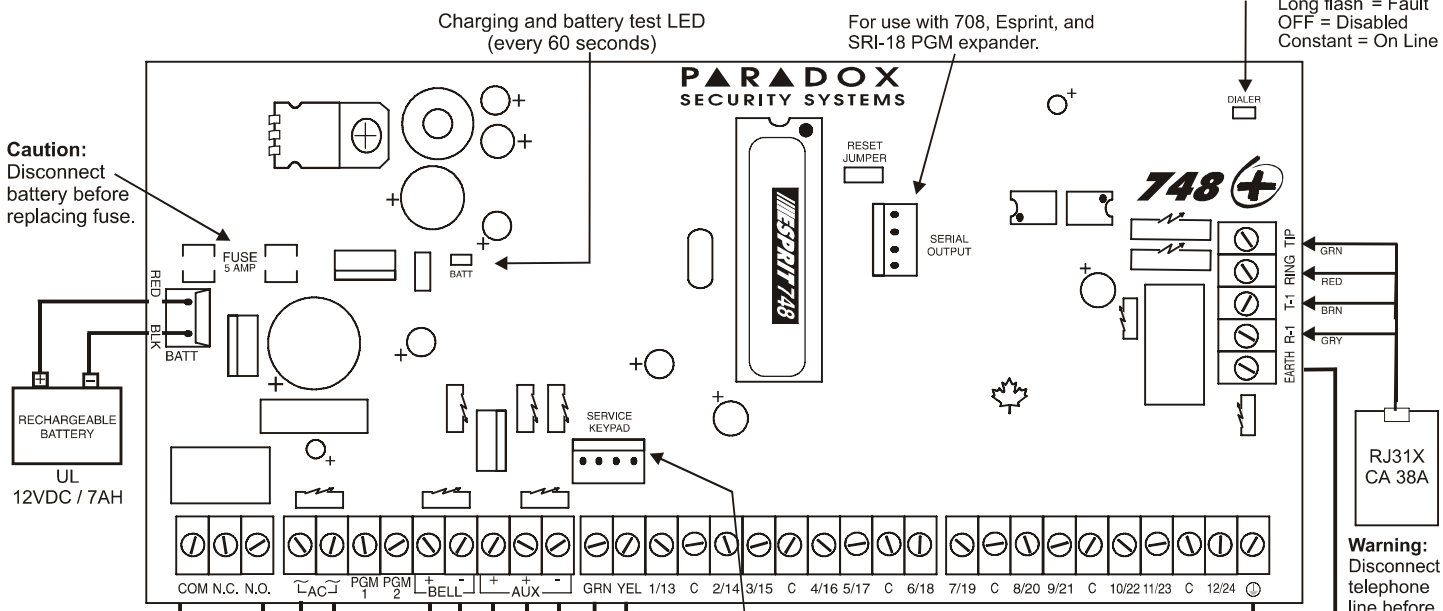


Optional 5A alarm relay

Service Keypad

Four pin connector can be used for quick installation of an Esprit keypad.

+ AUX - GRN YEL

**MINIMUM: 40VA**
**RECOMMENDED: 75VA**
UL: K12 Model T16 V40
UL: K12 Model T16 V75

**Warning:** Improper connection may result in damage to the system.

TRANSFO 16.5VAC 75VA

A.C. POWER

BELL SIREN

BELL OUTPUT will shut down if current exceeds 3A.

UL: Wheelock 46T-12

220Ω KEYSWITCH

Ground clamp

Cold water pipe grounding

AWG#14 single conductor solid copper wire

To mounting cabinet

YEL
GRN
BLK
RED

**To provide maximum lightning protection we strongly recommend having separate earth connections for the dialer and zone ground terminals.**

+ + - 1A (75VA transformer only)
1A (75VA transformer only)

**TWO AUX POWER SUPPLIES**
1A max. (each) 250mA max. for 24 hr. stand-by. To connect additional wiring to auxiliary power, use the red (+) and black (-) keypad connectors. Each AUX output will shut down if current exceeds 1.1A.

*NOTE: Each auxiliary supply will provide 1A if a **75VA** transformer is used. Each auxiliary supply will provide 500mA when using a **40VA** transformer.*

## FIRE ALARM ZONE CONNECTIONS

**Without ATZ**
**Address 090; key [1] on**
**Address 100; key [3] on.**
To set zone 3 as a fire zone.

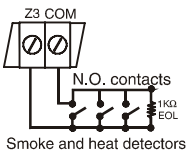


Smoke and heat detectors

**With ATZ enabled**
**Address 090; key [1] off**
**Address 100; key [3] on.**

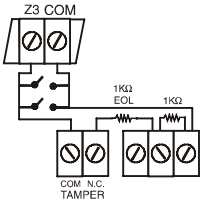


## FIRE RESET

To program PGM to conduct a 4 second smoke detector reset when [CLEAR] and [ENTER] are pressed simultaneously:

Address **039** = **[BYP]** (first digit)
Address **040** = **[5] [0]**
Address **042** = **[2ND] [6]**
Address **056** = **[0] [0] [4]**

* PGM maximum 50mA

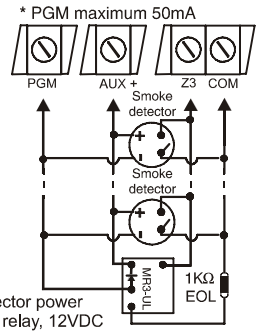


Smoke detector power supervision relay, 12VDC

Smoke detector must be 4 wire latching - UL Falcon model 5454.

## KEYPADS

- LED Keypads 616, 626, & 633
- LCD Keypads 639
- PS1 Bedside Remote

The maximum number of keypads per installation is dependent on the auxiliary output (see adjacent). Please refer to the current consumption table in section 2.3.3 of the instruction manual. For information on connecting keypad zones, refer to page 13 of the programming guide.

## GROUND START CIRCUIT

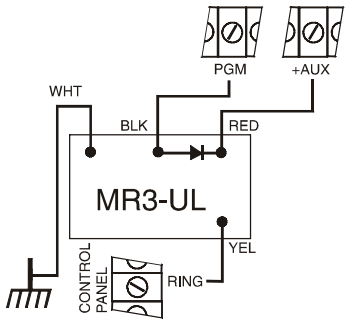


Not permitted on UL listed systems

## PGM OUTPUT RELAY

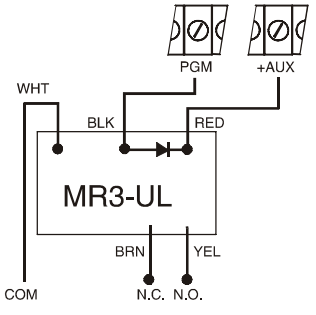


PARADOX SECURITY SYSTEMS
780 Industrial Blvd., St-Eustache, Montreal, Quebec, Canada J7R 5V3 Fax: (450) 491-2313 http://www.paradox.ca

Paradox Security Systems Graphic Dept
PRINTED IN CANADA - 11/98